AQA Higher Paper 3 Practice Questions

Q1.

By completing the square, find the coordinates of the turning point of the curve with equation
$y = x^2 + 10x + 18$
You must show all your working.

$y = (x+5)^2 - 25 + 18$

$y = (x+5)^2 - 7$

(-5 , -7)

(Total for question = 3 marks)

Q2.

At time t = 0 hours a tank is full of water.

Water leaks from the tank.
At the end of every hour there is 2% less water in the tank than at the start of the hour.

The volume of water, in litres, in the tank at time t hours is V_t

Given that

$V_0 = 2000$
$V_{t+1} = kV_t$

write down the value of k.

2% Less = 98%

k = 0.98

(Total for question = 1 mark)

Q3.

Here are the first six terms of a Fibonacci sequence.

1 1 2 3 5 8 13 21 34

The rule to continue a Fibonacci sequence is,

the next term in the sequence is the sum of the two previous terms.

(a) Find the 9th term of this sequence.

34

(1)

The first three terms of a different Fibonacci sequence are

a b $a + b$ $a+2b$ $2a+3b$

(b) Show that the 6th term of this sequence is $3a + 5b$

$3a + 5b$

(2)

Given that the 3rd term is 7 and the 6th term is 29,

(c) find the value of a and the value of b.

$a + b = 7$

$\times 3$ $3a + 5b = 29$

$3a + 3b = 21$

$2b = 8$

$b = 4$

$a + 4 = 7$

$a = 3$

$a = 3, b = 4$

(3)

(Total for question = 6 marks)

Q4.

The graph shows information about the velocity, v m/s, of a parachutist t seconds after leaving a plane.

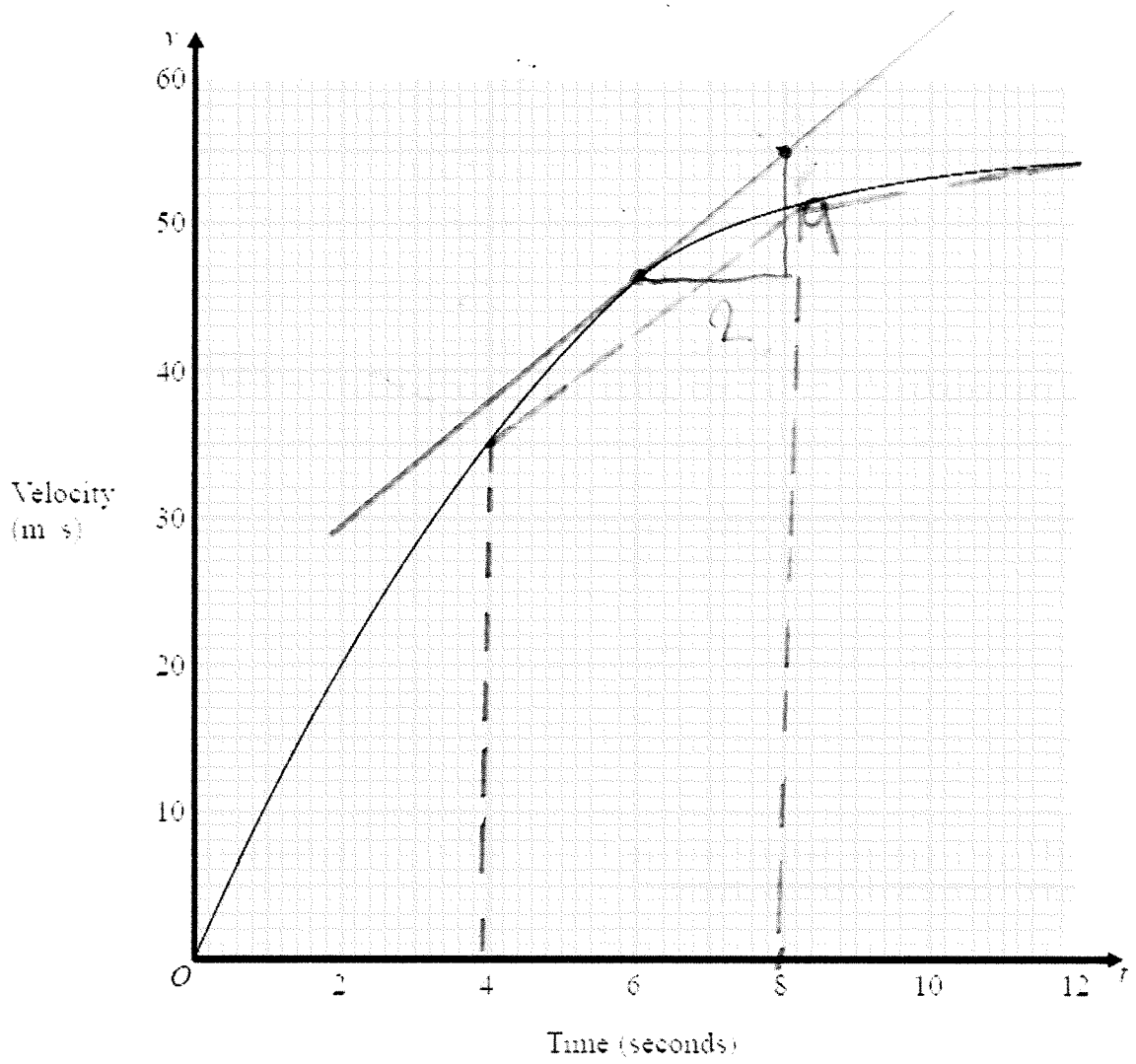

(a) Work out an estimate for the acceleration of the parachutist at $t = 6$

$9 \div 2 =$

4.5 m/s²

(2)

(b) Work out an estimate for the distance fallen by the parachutist in the first 12 seconds after leaving the plane.
Use 3 strips of equal width.

1st four seconds is roughly a triangle $= \frac{1}{2} \times 4 \times 35$
$= 70$ m

2nd four seconds is a trapezium $= \frac{1}{2}(35+51) \times 4$
$= 172$ m

3rd four seconds is a trapezium
$= \frac{1}{2}(51+54) \times 4$
$= 210$ m

452 m

(3)

(Total for question is 5 marks)

Q5.

(a) Show that the equation $x^3 - 3x^2 + 3 = 0$ has a solution between $x = 2$ and $x = 3$

$x = 2 \quad 2^3 - 3 \times 2^2 + 3 = -1$

$x = 3 \quad 3^3 - 3 \times 3^2 + 3 = 3$

$-1 < 0 < 3$ so $2 < x < 3$

(2)

(b) Show that the equation $x^3 - 3x^2 + 3 = 0$ can be rearranged to give $x = \sqrt[3]{3x^2 - 3}$

$x^3 - 3x^2 + 3 = 0$

$x^3 = 3x^2 - 3$

$x = \sqrt[3]{3x^2 - 3}$

(1)

(c) Starting with $x_0 = 2$, use the iteration formula $x_{n+1} = \sqrt[3]{3x_n^2 - 3}$ to find the value of x_2
Give your answer correct to 3 decimal places.

$x_0 = 2$

$x_1 = \sqrt[3]{3 \times 2^2 - 3} = 2.080083823$

$x_2 = \sqrt[3]{3x_1^2 - 3} = 2.153015141$

2.15

(3)

(Total for question = 6 marks)

Q6.

Solve $\frac{x+1}{2} + \frac{2x-1}{3} = \frac{5}{6}$

$$\frac{3(x+1)}{6} + \frac{2(2x-1)}{6} = \frac{5}{6}$$

$$3(x+1) + 2(2x-1) = 5$$

$$3x+3 + 4x - 2 = 5$$

$$7x + 1 = 5$$

$$7x = 4$$

x = $\frac{4}{7}$

(Total for question = 4 marks)

Q7.

(a) Expand and simplify $(y + 2)(y + 5)$

	y	2
y	y^2	$2y$
5	$5y$	10

$y^2 + 7y + 10$

(2)

(b) Factorise $e^2 + e - 12$

	e	-3
e	e^2	$-3e$
4	$4e$	-12

-1×12
-2×6
-3×4
-4×3
-6×2
-12×1

$(e-3)(e+4)$

(2)

(c) Solve $3x^2 - x - 1 = 0$

Give your solutions correct to 2 decimal places.

$a = 3$
$b = -1$
$c = -1$

$$x = \frac{-(-1) \pm \sqrt{(-1)^2 - 4 \times 3 \times (-1)}}{2 \times 3}$$

$x = 0.767591879 2$
and $x = -0.434258459$

$0.77, -0.43$

(3)

(Total for question = 7 marks)

Q8.

The line **N** is drawn below.

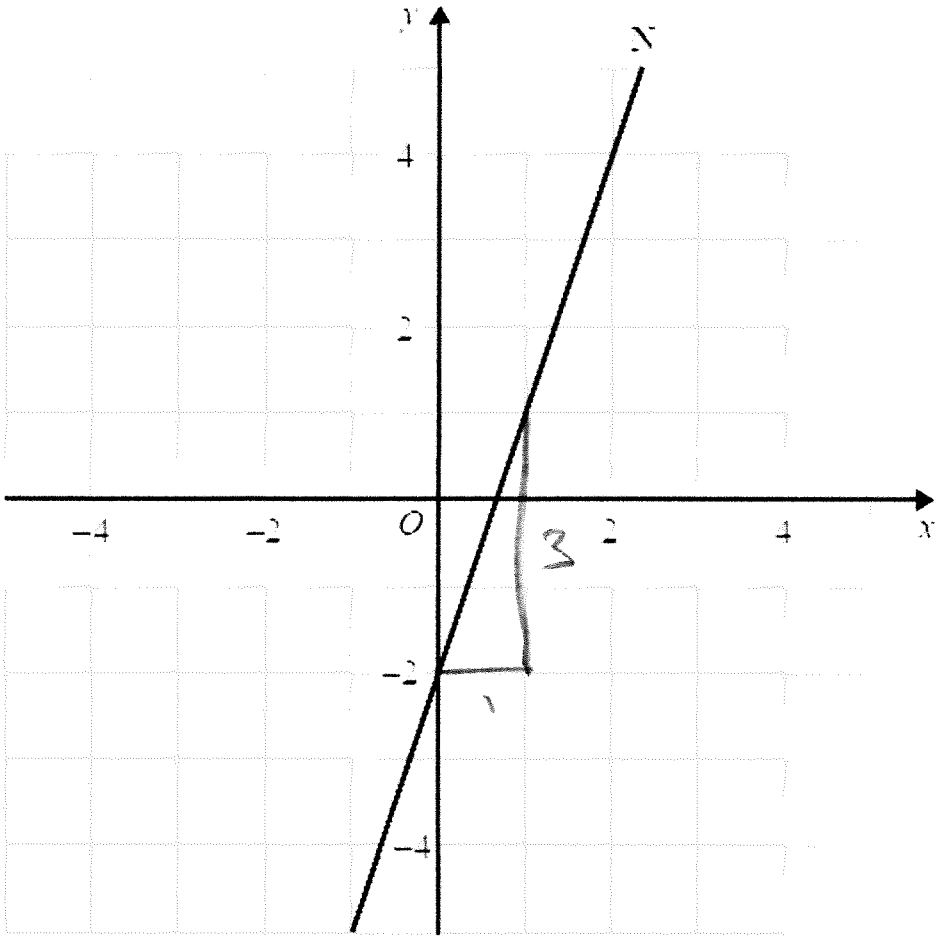

Find an equation of the line perpendicular to line **N** that passes through the point (0, 1).

gradient of N = 3

perpendicular gradient = $-\frac{1}{3}$

y-intercept = 1

$y = -\frac{1}{3}x + 1$

(Total for question = 3 marks)

Q9.

Here is a sketch of part of the graph of $y = pq^x$ where $q > 0$

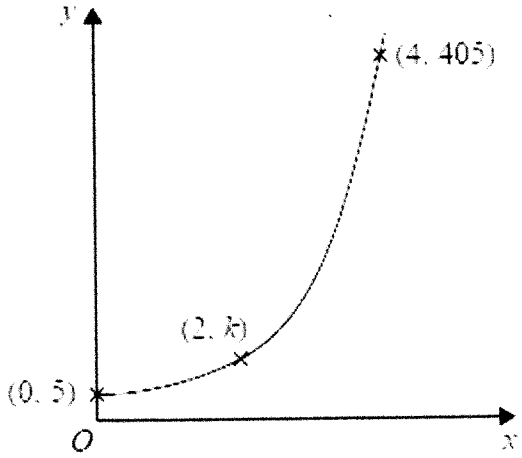

The points (0, 5), (2, k) and (4, 405) are all on the graph of $y = pq^x$

Find the value of k.

$y = p\,q^x$ $\quad 5 = p\,q^0$ $\quad 5 = p \times 1$ $\quad p = 5$

$y = 5q^x$ $\quad 405 = 5q^4$ $\quad 81 = q^4$ $\quad q = \sqrt[4]{81}$ $\quad q = 3$

$y = 5 \times 3^x$ $\quad k = 5 \times 3^2$ $\quad k = 45$

(Total for question = 4 marks)

Q10.

y is inversely proportional to x^3

$y = 44$ when $x = a$

Show that $y = 5.5$ when $x = 2a$

$y \times x^3 = K$

$44a^3 = K$

$y \times x^3 = 44a^3$

if $x = 2a$

$y \times (2a)^3 = 44a^3$

$y \times 8a^3 = 44a^3$

$y = \frac{44a^3}{8a^3}$ $\quad y = 5.5$

(Total for question = 3 marks)

Q11.

y is inversely proportional to the square root of x.

When $x = 4$, $y = 9$

Work out the value of y when $x = 6$

Give your answer correct to 3 significant figures.

$y \times \sqrt{x} = K$

$9 \times \sqrt{4} = K$

$K = 18$

$y \times \sqrt{x} = 18$

$y \times \sqrt{6} = 18$

$y = \frac{18}{\sqrt{6}} = 7.348469228$

7.35

(Total for question = 3 marks)

Q12.
Martin did this question.

Rationalise the denominator of $\dfrac{14}{2+\sqrt{3}}$

Here is how he answered the question.

$$\frac{14}{2+\sqrt{3}} = \frac{14 \times (2-\sqrt{3})}{(2+\sqrt{3})(2-\sqrt{3})}$$

$$= \frac{28-14\sqrt{3}}{4+2\sqrt{3}-2\sqrt{3}+3}$$

$$= \frac{28-14\sqrt{3}}{7}$$

$$= 4-2\sqrt{3}$$

Martin's answer is wrong.

(a) Find Martin's mistake.

$(2+\sqrt{3})(2-\sqrt{3}) = 4+2\sqrt{3}-2\sqrt{3}-3$ and Martin wrote $+3$ at the end.

(1)

Sian did this question.

Rationalise the denominator of $\dfrac{5}{\sqrt{12}}$

Here is how she answered the question.

$$\frac{5}{\sqrt{12}} = \frac{5\sqrt{12}}{\sqrt{12} \times \sqrt{12}}$$

$$= \frac{5 \times 3\sqrt{2}}{12}$$

$$= \frac{5\sqrt{2}}{4}$$

Sian's answer is wrong.

(b) Find Sian's mistake.

$\sqrt{12} = \sqrt{4} \times \sqrt{3} = 2\sqrt{3}$ and Sian wrote $3\sqrt{2}$

(1)

(Total for question = 2 marks)

Q13.

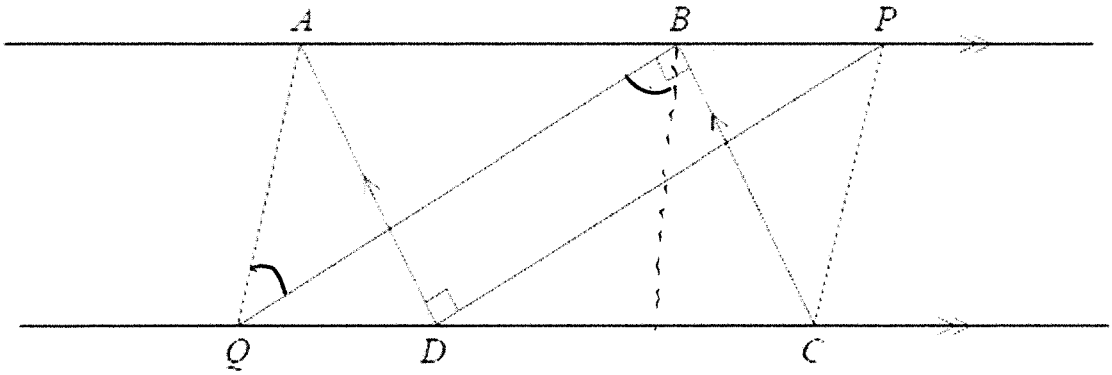

ABCD is a parallelogram.
ABP and *QDC* are straight lines.
Angle *ADP* = angle *CBQ* = 90°

(a) Prove that triangle *ADP* is congruent to triangle *CBQ*.

AD = BC as opposite sides in a parallelogram are equal

∠DAB = ∠BCQ as opposite angles in a parallelogram are equal

∠CBQ = ∠ADP both given as 90°

Therefore by ASA ADP ≡ CBQ

(3)

(b) Explain why *AQ* is parallel to *PC*.

AP = QC because triangles ADP and CBQ are congruent

This means that APCQ is a parallelogram

(2)

so AQ is parallel to PC

(Total for question = 5 marks)

Q14.

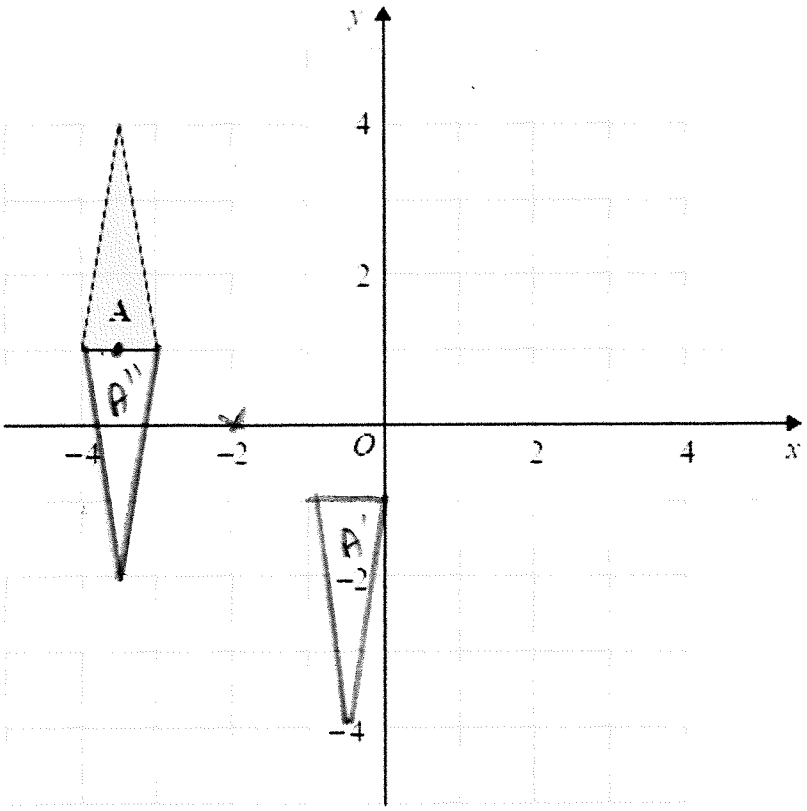

Triangle A is transformed by the combined transformation of a rotation of 180° about the point (−2, 0) followed by a translation with vector $\begin{pmatrix} -3 \\ 2 \end{pmatrix}$

One point on triangle A is invariant under the combined transformation.

Find the coordinates of this point.

(−3.5 , 1)

(Total for question = 2 marks)

Q15.

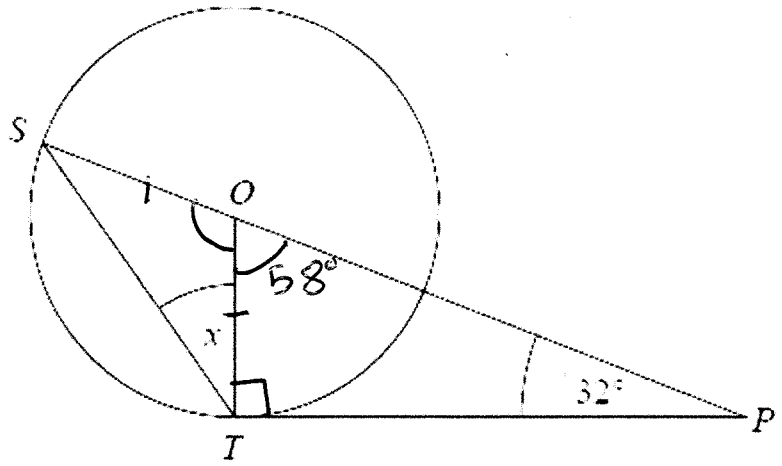

S and *T* are points on the circumference of a circle, centre *O*.
PT is a tangent to the circle.
SOP is a straight line.
Angle *OPT* = 32°

Work out the size of the angle marked *x*.
You must give a reason for each stage of your working.

$\angle OTP = 90°$ where radius meets tangent

$\angle TOP = 58°$ as angles in a triangle sum to 180°

$\angle TOS = 122°$ as angles on a straight line at a point sum to 180°

$x = \frac{180 - 122}{2} = 29°$ as angles in a triangle sum to 180° and triangle OST is isosceles, meaning

(Total for question = 4 marks)

$\angle OTS$ and $\angle OST$ are equal.

Q16.

Zahra mixes 150g of metal A and 150g of metal B to make 300g of an alloy.

Metal A has a density of 19.3g/cm^3.
Metal B has a density of 8.9g/cm^3.

Work out the density of the alloy.

Volumes:

Metal A = 150/19.3 = 7.772020725 cm^3

Metal B = 150/8.9 = 16.85393258 cm^3

Alloy = 7.772... + 16.8539... = 24.62959331 cm^3

Alloy density = 300 / 24.6289... = 12.1822695

12.2 g/cm^3 ..... cm^3

(Total for question = 4 marks)

Q17.

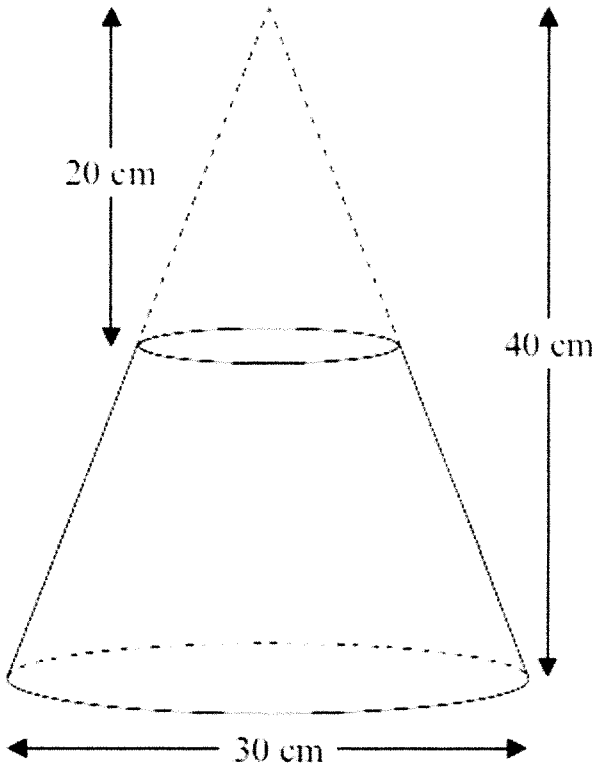

Diagram **NOT** accurately drawn

A frustrum is made by removing a small cone from a similar large cone.

The height of the small cone is 20 cm.
The height of the large cone is 40 cm.
The diameter of the base of the large cone is 30 cm.

Work out the volume of the frustrum.
Give your answer correct to 3 significant figures.

Diameter of small cone = 15cm.

Volume of small cone $= \frac{1}{3}\pi(7.5)^2 \times 20 = 375\pi$

Volume of large cone $= \frac{1}{3}\pi(15)^2 \times 40 = 3000\pi$

Volume of frustrum = 8246.680716

8250 ..... cm^3

(Total for Question is 4 marks)

Q18.

ABCDEFGH is a cuboid.

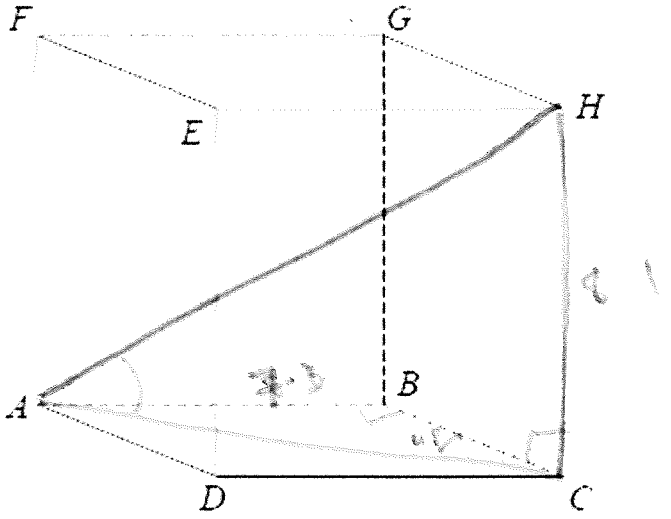

AB = 7.3 cm
CH = 8.1 cm
Angle *BCA* = 48°

Find the size of the angle between *AH* and the plane *ABCD*. Give your answer correct to 1 decimal place.

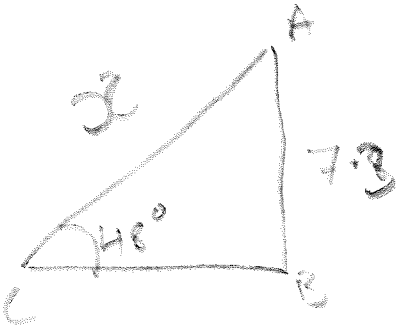

$\sin 48° = \frac{7.3}{x}$

$x = \frac{7.3}{\sin 48} = \cancel{10.49935529}$ 9.823118926

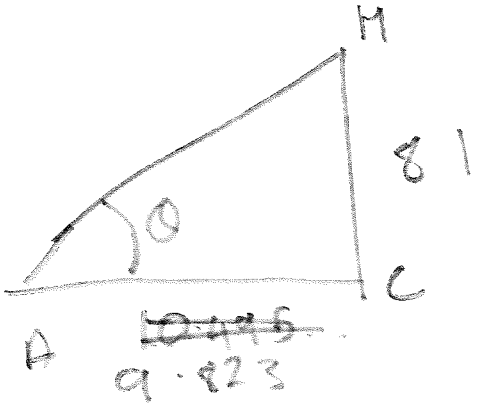

$\tan \theta = \cancel{\frac{8.1}{10.46}}$ 9 $\frac{8.1}{9.82...}$

$\theta = \tan^{-1}\left(\frac{8.1}{9.82}\right)$

$\theta = 39.50849231$

39.5 °

(Total for question = 4 marks)

Q19.

Here is a shaded shape *ABCD*.

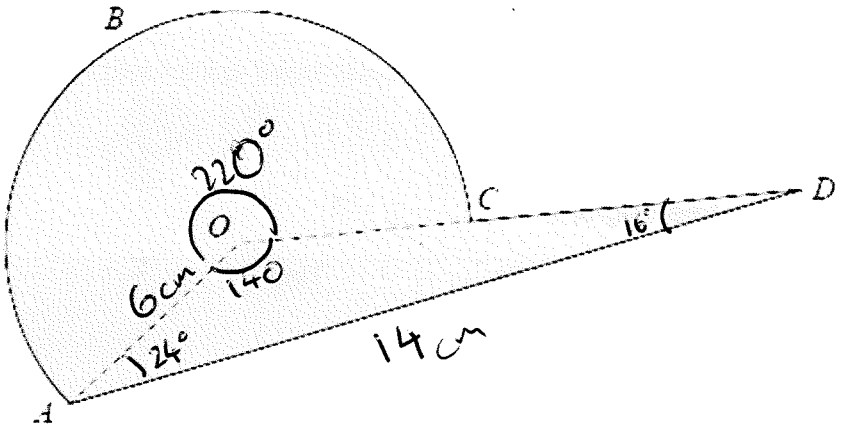

The shape is made from a triangle and a sector of a circle, centre O and radius 6 cm.
OCD is a straight line.

AD = 14 cm
Angle *AOD* = 140°
Angle *OAD* = 24°

Calculate the perimeter of the shape.
Give your answer correct to 3 significant figures.

~~Arc ABC =~~ Arc ABC $= \frac{220}{360} \times \pi \times 12 = 23.0383461$ cm

$\frac{OD}{\sin 24} = \frac{14}{\sin 140}$ $\quad OD = \frac{14 \sin 24}{\sin 140}$

$OD = 8.858778416$

$CD = OD - 6 = 2.858778416$ ..... 39.9 cm

(Total for question = 5 marks)

Perimeter $= 23.038\ldots + 2.858\ldots + 14$
$= 39.89712\ldots$

Q20.

There are 8 counters in a box.
The letter A is on 6 of the counters.
The letter B is on the other 2 counters.

Sally takes at random a counter from the box.
She keeps the counter.
Then Tina takes at random a counter from the box.

(a) Complete the probability tree diagram.

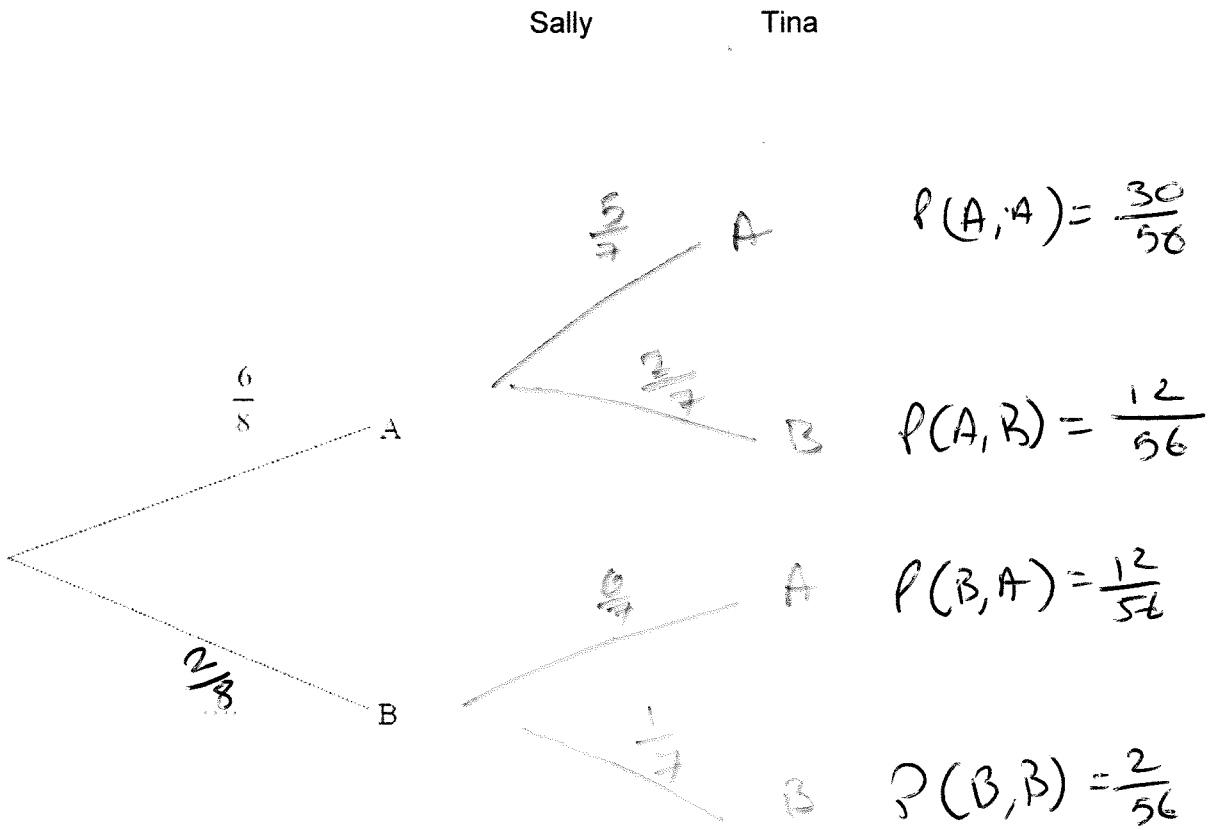

(3)

(b) Work out the probability that both Sally and Tina take a counter with the letter A on it.

$\frac{30}{56}$.

(2)

(c) Work out the probability that at least one counter with the letter A on it is taken.

$1 - \frac{2}{56}$

$\frac{54}{56}$

(3)

(Total for question = 8 marks)

Q21.

Here are the times, in seconds, that 15 people waited to be served at Rose's garden centre.

5 9 11 14 15 20 22 25 27 27 20 22 25 27

(a) On the grid, draw a box plot for this information.

5, 9, 11, 14, 15, 20, 20 | 22, 22, 25, 25, 27, 27, 27

Q_1 $Q_2 = 21$ Q_3

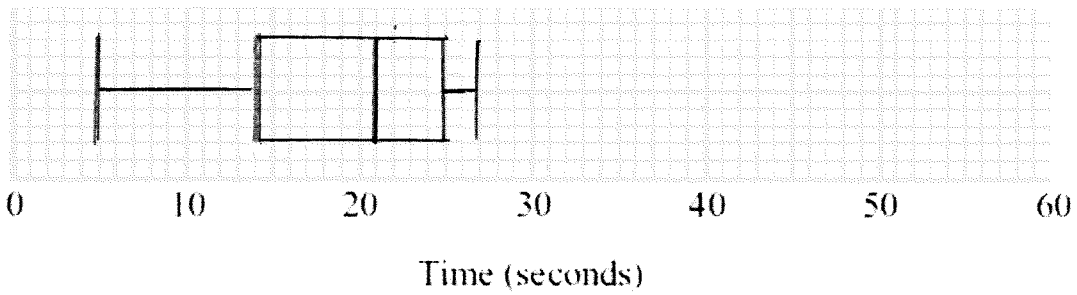

(3)

The box plot below shows the distribution of the times that people waited to be served at Green's garden centre.

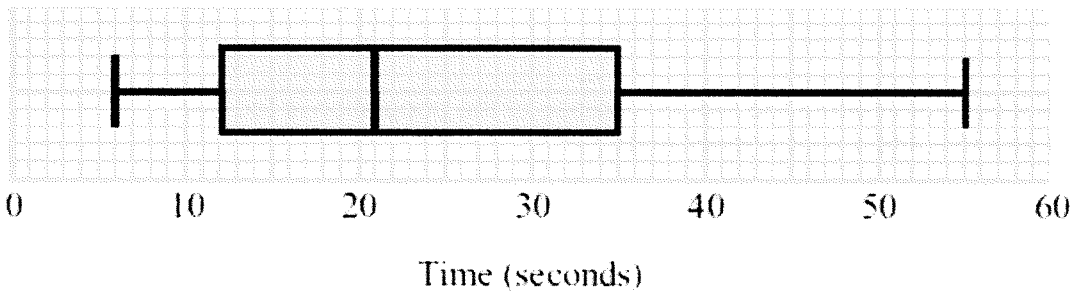

(b) Compare the distribution of the times that people waited at Rose's garden centre and the distribution of the times that people waited at Green's garden centre.

On average they wait the same time as the medians are the same. The times at Rose's garden centre are more consistent than Greens as the IQR is smaller.

(2)

(Total for Question is 5 marks)

Q22.

The population of a city increased by 5.2% for the year 2014

At the beginning of 2015 the population of the city was 1560 000

Lin assumes that the population will continue to increase at a constant rate of 5.2% each year.

(a) Use Lin's assumption to estimate the population of the city at the beginning of 2017
Give your answer correct to 3 significant figures.

$1\,560\,000 \times 1.052^2 = 1726485.24$

1730000 people

(3)

(b) (i) Use Lin's assumption to work out the year in which the population of the city will reach 2 000 000

2018 = 1816234
2019 = 1910678
2020 = 2010033

2019

(ii) If Lin's assumption about the rate of increase of the population is too low, how might this affect your answer to (b)(i)?

It might be earlier as the population will increase quicker.

(3)

(Total for question = 6 marks)

Q23.

Jean invests £12 000 in an account paying compound interest for 2 years.

In the first year the rate of interest is x%
At the end of the first year the value of Jean's investment is £12 336

In the second year the rate of interest is $\frac{x}{2}$ %

What is the value of Jean's investment at the end of 2 years?

$\frac{336}{12000} \times 100 = 2.8\%$, in first year.

rate in second year = 1.4 %

12 336 × 1.0140 = 12508.74

£ 12508.74

(Total for question = 4 marks)

Q24.

The nth term of a sequence is given by $an^2 + bn$ where a and b are integers.

The 2nd term of the sequence is –2
The 4th term of the sequence is 12

(a) Find the 6th term of the sequence.

$a(2)^2 + b(2) = 4a + 2b = -2$

$a(4)^2 + b(4) = 16a + 4b = 12$ $\times 2$

$8a + 4b = -4$

$8a = 16$

$a = 2$

IF $a = 2$

$8 + 2b = -2$

$2b = -10$

$b = -5$

so $2n^2 - 5n$

$2 \times 6^2 - 5 \times 6 = 42$

42

(4)

Here are the first five terms of a different quadratic sequence.

0 2 6 12 20

(b) Find an expression, in terms of n, for the nth term of this sequence.

$2a = 2 \quad a = 1$

$n^2 - n$

(2)

$3a + b = 2$

$3 + b = 2$

$b = -1$

$a + b + c = 0$

$1 + -1 + c = 0$

$c = 0$

(Total for question = 6 marks)